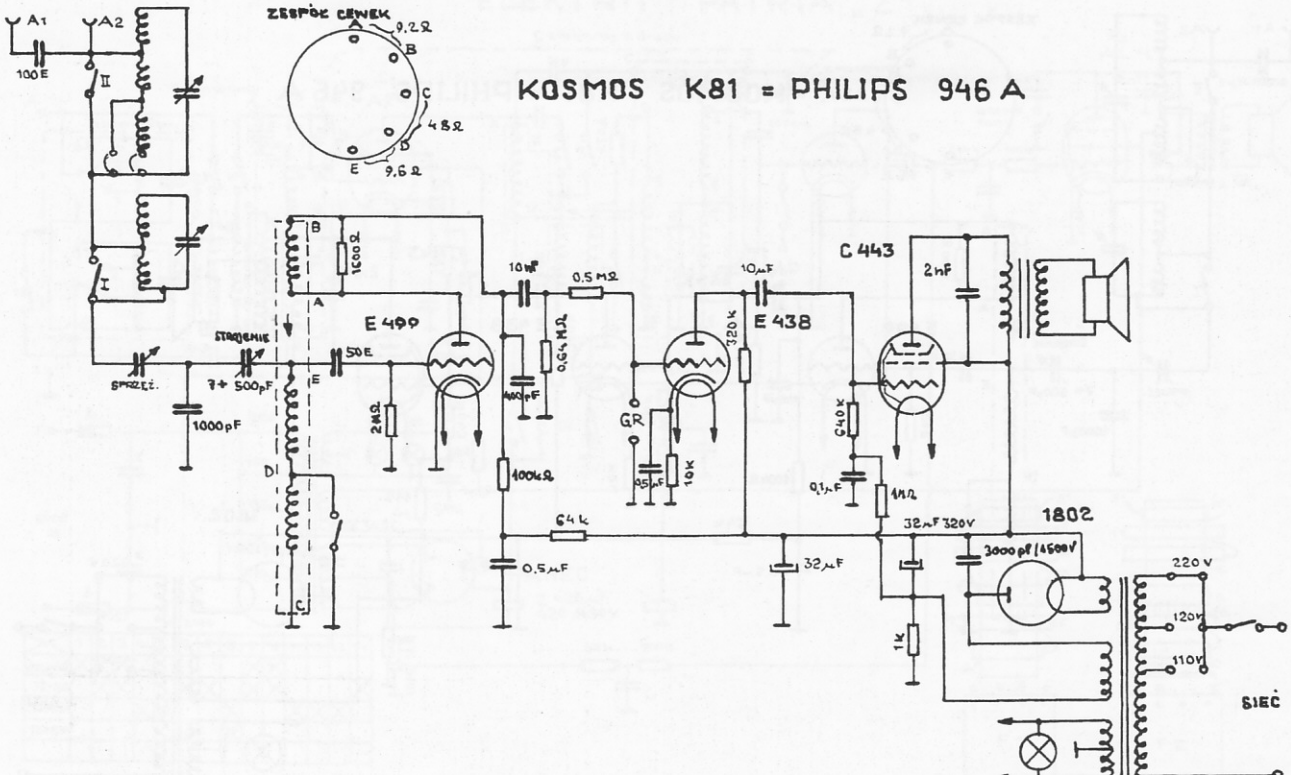KOSMOS K81 = PHILIPS 946 A